United States Patent [19]

Ecklin

[11] **3,879,622**

[45] **Apr. 22, 1975**

[54] **PERMANENT MAGNET MOTION CONVERSION DEVICE**

[76] Inventor: **John W. Ecklin,** 5100 8th Rd., South, Apt. 508, Arlington, Va. 22204

[22] Filed: **Mar. 29, 1974**

[21] Appl. No.: **456,336**

[52] **U.S. Cl.** **310/80;** 310/103; 310/24

[51] **Int. Cl.** **H02k 7/06**

[58] **Field of Search** 310/20–24, 310/80, 103, 190

[56] **References Cited**

UNITED STATES PATENTS

1,724,446	8/1929	Worthington	310/46
3,609,425	9/1971	Sheridan	310/103
3,703,653	11/1972	Tracy et al.	310/103 X
3,773,439	11/1973	Sheridan	310/80 X
3,811,058	5/1974	Kiniski	310/103 X

Primary Examiner—Donovan F. Duggan
Attorney, Agent, or Firm—Crickenberger & Moore

[57] **ABSTRACT**

A permanent magnet motor in one embodiment utilizes a spring-biased reciprocating magnetizable member positioned between two permanent magnets. Magnetic shields in the form of rotatable shutters are located between each permanent magnet and the reciprocating member to alternately shield and expose the member to the magnetic field thereby producing reciprocating motion. A second embodiment utilizes a pair of reciprocating spring-biased permanent magnets with adjacent like magnetic poles separated by a magnetic shield which alternately exposes and shields the like poles from the repelling forces of their magnetic fields.

5 Claims, 4 Drawing Figures

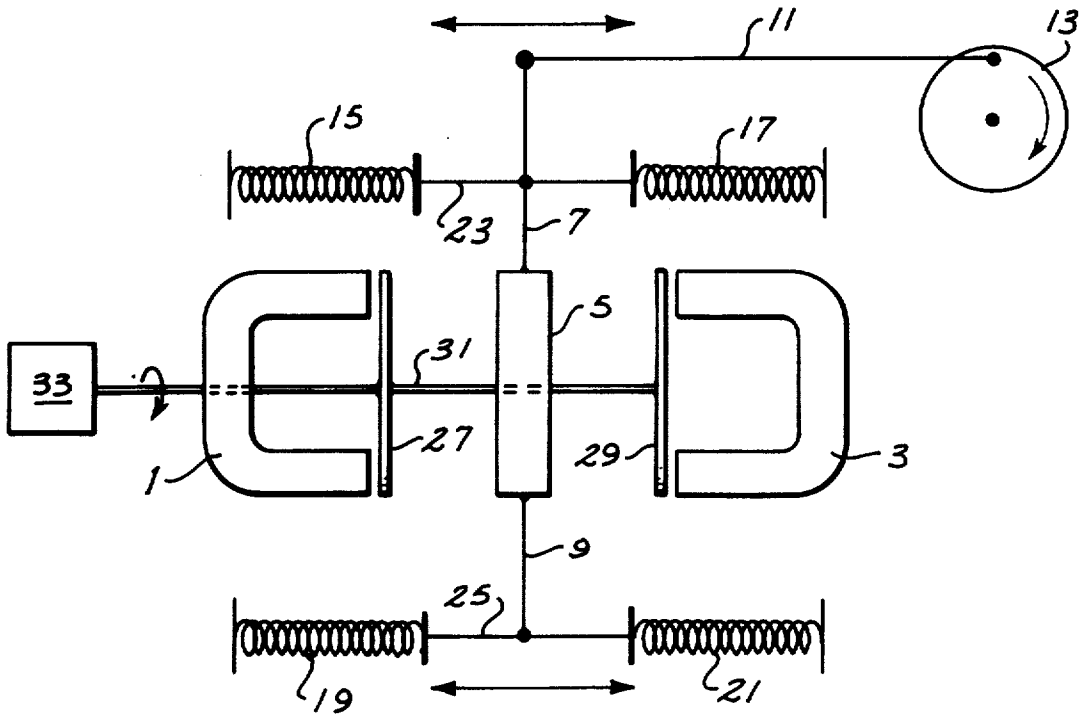

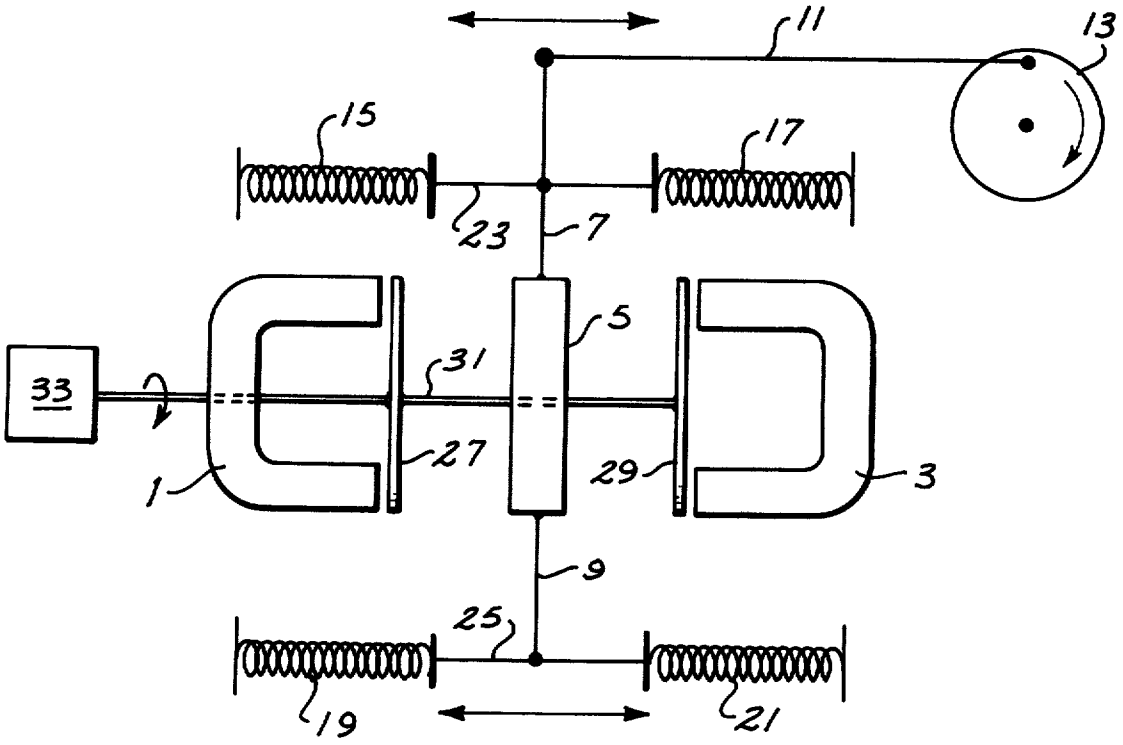

Fig. 1

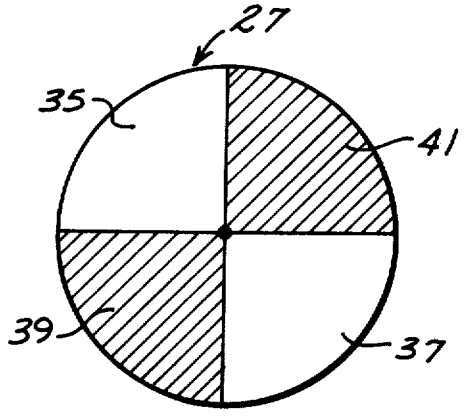

Fig. 2

Fig. 3

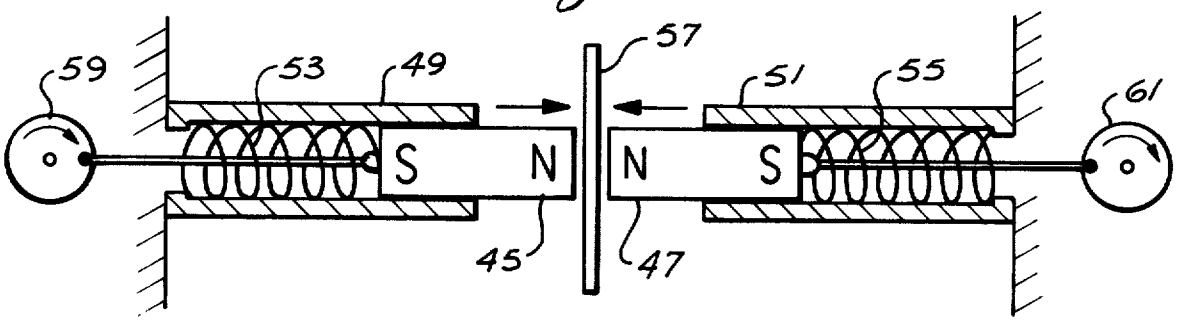

Fig. 4

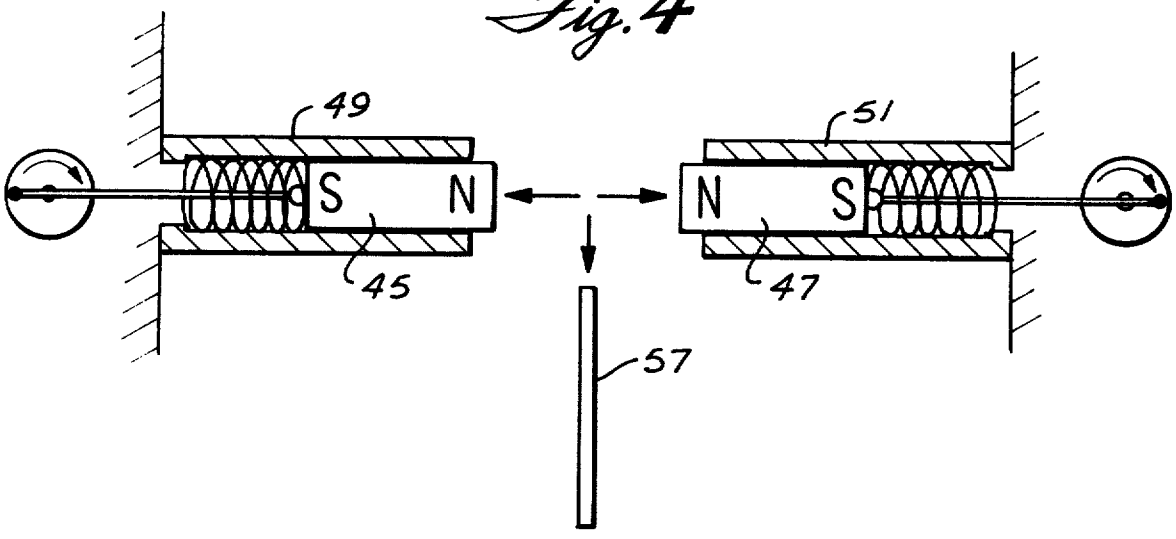

PERMANENT MAGNET MOTION CONVERSION DEVICE

BACKGROUND OF THE INVENTION

This invention relates to the use of energy stored in the fields of permanent magnets. This energy is utilized in prime movers capable of producing work without the addition of energy from an outside source.

The world is now confronted with a crisis brought about by a shortage of sources of energy. People everywhere are being asked to conserve energy in every possible way, and scientists are seeking diligently for new sources of energy and for ways to utilize conventional sources more efficiently.

Electromagnetic energy is known and employed throughout the world in countless applications. Permanent magnets have played a large part in the development and utilization of electromagnetic energy, but no significant use as a primary energy source has ever been made of the potential energy which exists in the field of a permanent magnet. It is an object of this invention to provide a permanent magnet motor which produces reciprocating motion. The reciprocating motion thus produced may be converted to rotary motion by conventional mechanisms as desired.

SUMMARY OF THE INVENTION

The invention utilizes the attraction and repulsion properties of the magnetic fields of permanent magnets to produce reciprocating motion in a member of magnetizable material. A first embodiment of the invention employs a pair of permanent magnets positioned in spaced relationship along a common axis. A spring-biased magnetizable member is mounted along the common axis between the permanent magnets. A rotatable shutter of magnetic shielding material is mounted between the spring-biased magnetizable member and each permanent magnet. When the shutters are rotated to expose and shield, in alternate sequence, the magnetizable member from the magnetic fields of the permanent magnets, the magnetizable member is caused to reciprocate along the common axis between the permanent magnets. The reciprocating motion of the member can be converted to useful work by conventional mechanisms.

A second embodiment utilizes a pair of permanent magnets mounted for reciprocating movement along a common axis. The magnets are spring-biased in adjacent positions with like magnetic poles facing each other. A magnetic shielding shutter is moved in and out from between the facing magnetic poles to cause the permanent magnets to repel each other against the spring action to produce reciprocating motion.

BRIEF DESCRIPTION OF THE DRAWINGS

FIG. 1 is a diagrammatic view of one embodiment of a permanent magnet motor constructed in accordance with the invention;

FIG. 2 is a plan view of one of the rotary shutters used as a magnetic shield in the device of FIG. 1;

FIG. 3 is a diagrammatic view of a second embodiment of the invention with the magnetic shield in position; and

FIG. 4 is a diagrammatic view of the device of FIG. 3 with the magnetic shield removed from between the permanent magnets.

DESCRIPTION OF THE PREFERRED EMBODIMENTS

The invention will be understood more readily by referring to FIG. 1 which is a diagrammatic view of a first form of the invention which may utilize either the attraction or replusion of magnetic fields to produce reciprocating motion in a prime mover device. A pair of permanent magnets **1** and **3** are positioned in spaced relationship to each other with a magnetizable member **5** located therebetween. The member **5** is shown with arms **7** and **9** connected thereto. Arm **7** is also connected to driving link **11** which is provided to convert the reciprocating motion of member **5** to rotary motion by means of eccentric connection to circular member **13.**

The member **5** is spring-biased in the position shown by means of springs **15, 17, 19** and **21.** Biasing links **23** and **25** connect arms **7** and **9** to the spring members.

A pair of rotatable shutter members **27** and **29** are mounted on shaft **31** which is concentric with the common axis of permanent magnets **1** and **3** and magnetizable member **5.** Shaft **31** is driven by a suitable device such as motor **33** shown.

FIG. **2** is a plan view of rotatable shutter **27** shown in FIG. **1.** The shutter **27** comprises cutout portions **35** and **37** and portions **39** and **41** of magnetic shielding material. The positions of the magnetic shielding portions of shutters **27** and **29** are displaced 90° in rotation from each other so that when shutter **27** exposes the pole pieces of permanent magnet **1,** shutter **29** is shielding the pole pieces of permanent magnet **3.**

In operation the motor **33** turns shaft **31** and the rotatable shutters **27** and **29** attached thereto. As the pole pieces of one of the permanent magnets are exposed, magnetizable member **5** is attracted thereto, since at the same time the pole pieces of the other permanent magnet will be shielded. As the shutter continues rotation the pole pieces of each magnet will be alternately exposed and shielded causing magnetizable member **5** to reciprocate back and forth between the permanent magnets with assistance from the biasing springs, one pair of which will be compressed while the other pair is tensioned. The circular wheel **13** serves as a power-take-off means and converts the reciprocating motion of magnetizable member **5** to circular motion for shaft rotation.

An alternative arrangement could be achieved in the device of FIG. **1** by substituting a permanent magnet for the magnetizable member **5.** In this case the magnet would have to be oriented so that like magnetic poles were always adjacent each other. The device would operate by the repulsion properties of like magnetic poles with the reciprocating member **5** being repelled by magnetic forces as the rotatable shutter uncovered the pole pieces.

FIGS. **3** and **4** illustrate a second embodiment of the invention employing the property of magnetic repulsion. A pair of permanent magnets **45** and **47** are positioned in tubular members **49** and **51.** Springs **53** and **55** bias permanent magnets **45** and **47** in position so that like magnetic poles are adjacent. A magnetic shutter member **57** separates permanent magnets **45** and **47** when they are in their fully-biased position.

When the magnetic shutter member **57,** which acts as a magnetic shield between permanent magnets **45** and **47,** is removed, as shown in FIG. **4,** the magnets **45** and

47 repel each other and compress springs 53 and 55. When the shutter member 57 is again placed between magnets 45 and 47, the compressed springs 53 and 55 force magnets 45 and 47 back into the position shown in FIG. 3. Periodic action of shutter member 57 will produce a periodic reciprocating motion which may be converted to useful rotary motion by circular wheels 59 and 61. The shutter 57 may be mounted for rotary motions in a fashion similar to shutters 27 and 29 of FIG. 1.

What is claimed is:

1. A permanent magnet motor comprising

a pair of permanent magnets positioned in spaced relationship,

a reciprocating magnetizable member positioned between said permanent magnets,

power-take-off means coupled to said reciprocating member,

spring means biasing said reciprocating member between said permanent magnets,

a pair of magnetic shields positioned on either side of said reciprocating member and between said permanent magnets to shield said reciprocating member from the magnetic fields of said permanent magnets, and

means to move said shields in and out between said reciprocating member and said permanent magnets to alternately shield and expose said member to the magnetic fields of said permanent magnets,

whereby the actions of the magnetic fields of the permanent magnets and the spring means cause the reciprocating magnetizable member to reciprocate between the permanent magnets.

2. The combination according to claim 1 wherein said magnetic shields comprise

rotatable shutters positioned to be inserted and removed at right angles to the magnetic fields of the permanent magnets.

3. The combination according to claim 1 wherein said spring means comprise

a spring connected to either side of said reciprocating member whereby motion of said reciprocating member in one direction will elongate one spring and compress the other to provide restorative forces to the reciprocating member at each end of its travel.

4. the combination according to claim 1 wherein

said reciprocating magnetizable member is a permanent magnet.

5. A permanent magnet motor comprising

first and second permanent magnets,

first and second mounting means for mounting said first and second magnets in spaced relationship for reciprocating movement along a common axis with like magnetic poles adjacent each other,

power-take-off means coupled to said first and second magnets, and

magnetic shield means positioned between said first and second magnets for alternately shielding and exposing the magnets to the magnetic field of the other,

first and second spring means for biasing said magnets in positions immediately adjacent each other,

whereby the alternate withdrawal and replacement of said shield means causes the magnets to repel each other against the biasing action of the springs and to be returned to their original adjacent positions by the spring action.

* * * * *